IF IN DOUBT ASK

REVISION HISTORY			
REV	DESCRIPTION	DATE	INIT.

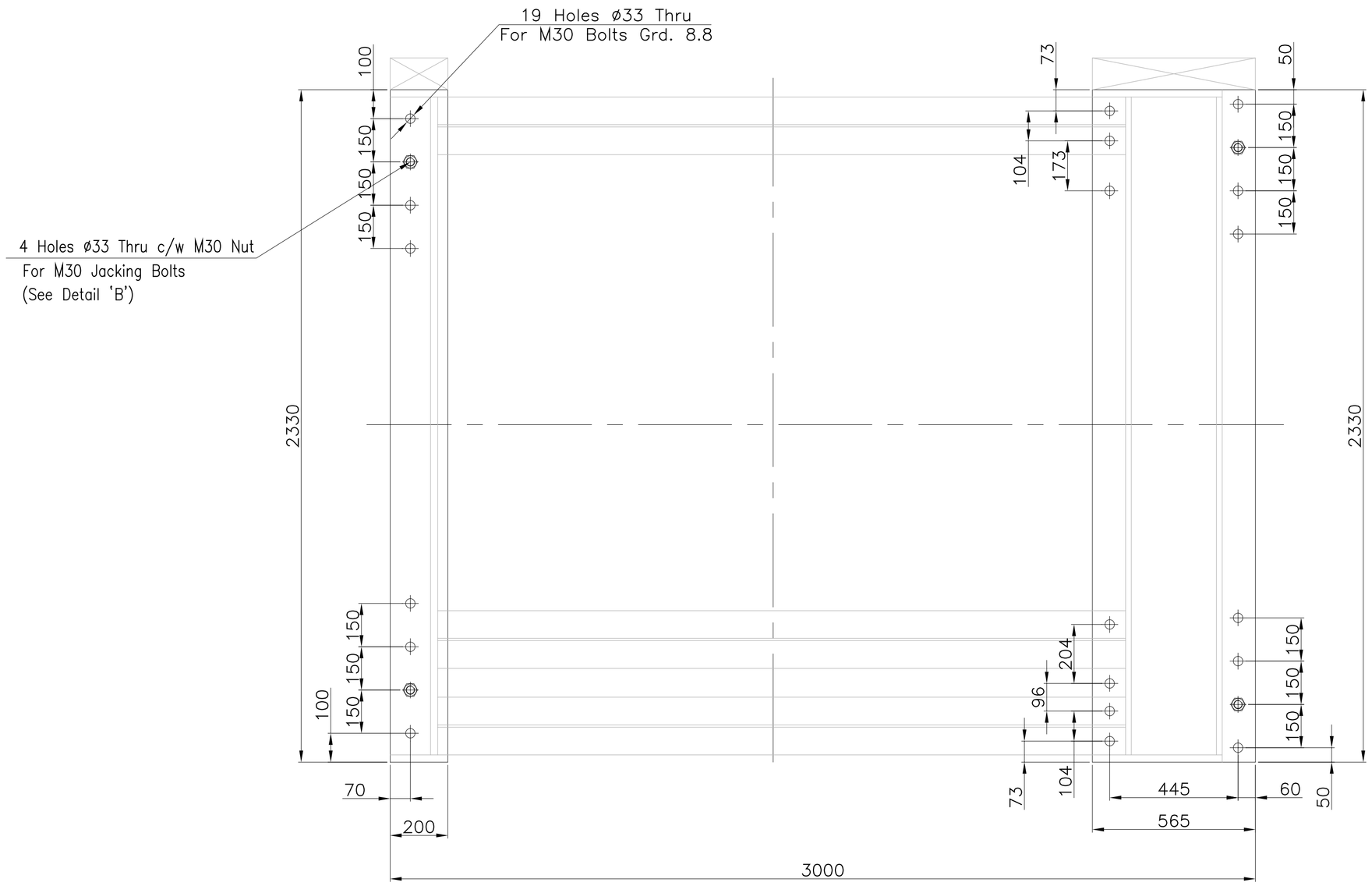

VIEW 'A–A'

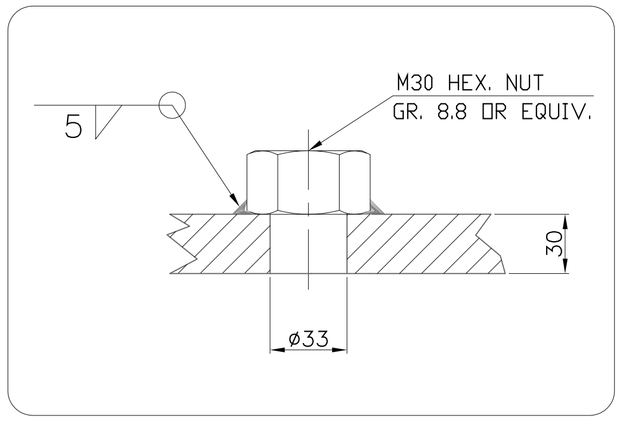

DETAIL 'B'

NOTES:–

1. ALL BOLT HOLES ON SHIPSEATING TO BE DRILLED ON SITE UPON WINCH IN POSITION.
2. ALL BASE PLATES THICKNESS ARE 30mm.
3. WINCH TO BE SECURED ONTO SHIPSEATING BY DOUBLE LOCK NUT [PROVIDED BY OTHERS].
4. SHIPSEATING PROVIDED BY OTHERS.

NOTES:

BASIC HYDRAULICS

PROVISIONAL

HYDAC INTERNATIONAL

CONFIDENTIAL AND PROPRIETARY - THIS DRAWING IS THE PROPERTY OF BASIC HYDRAULICS (PTY) LTD AND SHALL ONLY BE USED FOR OUR EXCLUSIVE BENEFIT. IT SHALL NOT BE COPIED OR REPRODUCED IN WHOLE OR IN PART WITHOUT THE WRITTEN PERMISSION OF THE COMPANY AND SHALL BE RETURNED TO THE COMPANY ON REQUEST. ACCEPTANCE OF THIS PRINT WILL BE CONSTRUED AS YOUR AGREEMENT TO THESE CONDITIONS.

TITLE:	SCALE:	PROJ.	MASS: (kg)
MAIN CRADLE WINCH GENERAL ARRANGEMENT MODEL: MCW-SD-55-90	N.T.S.		N/A
	DIMENSION: (mm)		DATE:
	DRAWN: AV		26-01-18
	APPROVED: JH		

PROJECT:	DOCUMENT:	SIZE:	REV.
J4344/17	4344 GEN 05-00000	A1	C

BASIC DRIVE AND CONTROL TECHNOLOGY

P.O. BOX 8214 ROGGEBAAI CAPE TOWN SOUTH AFRICA